ENTAL CAPITALS FOR WOOD

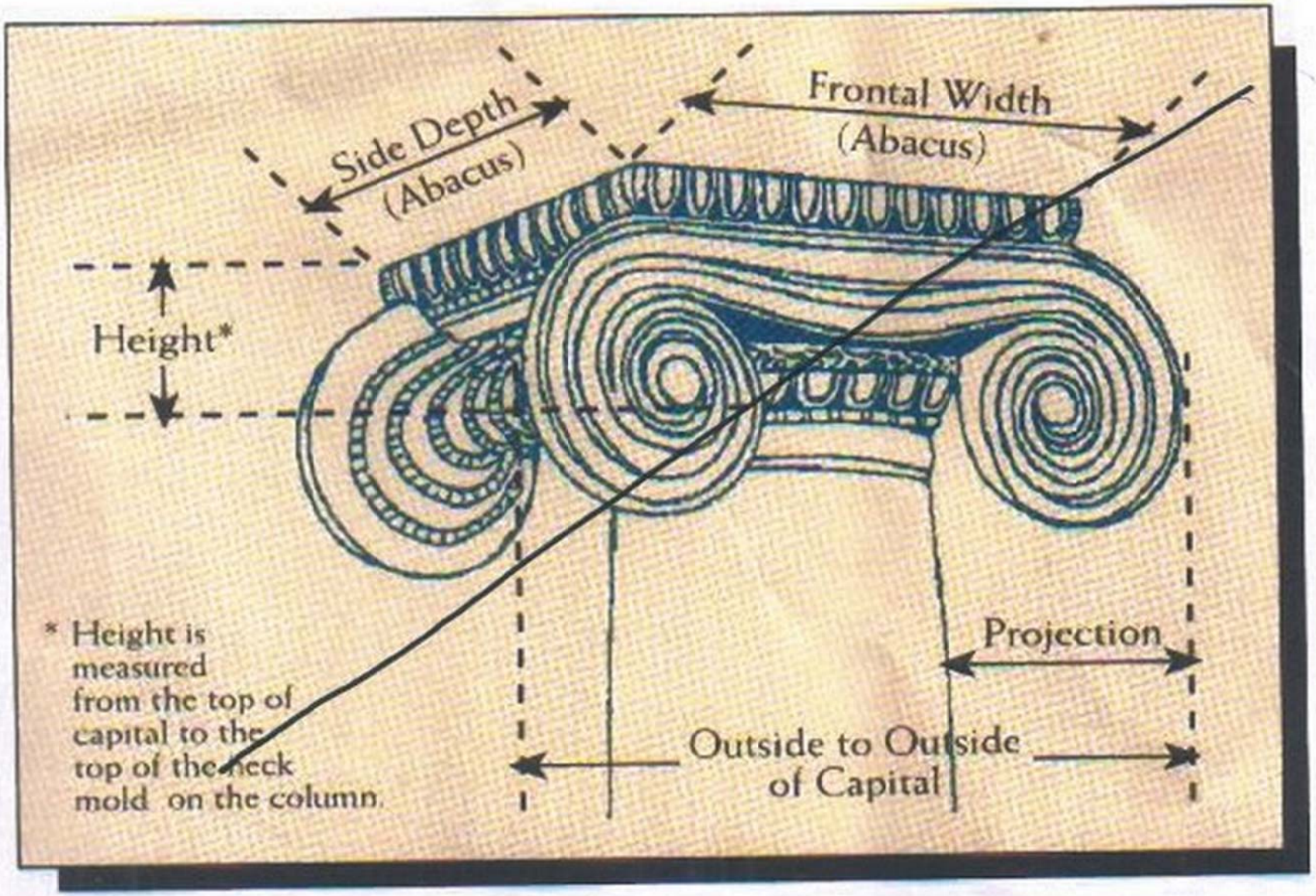

N ORNAMENTAL CAPITAL

APPLYING AN ORNAMENTAL CAPI

Ornamental Capitals for Wood Columns

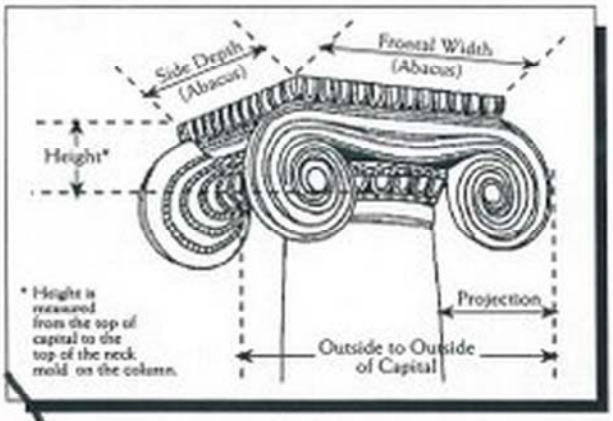

APPLYING AN ORNAMENTAL CAPITAL RESTING ON THE TOP OF THE COLUMN

Ornamental capitals can be installed without removing the "T" dimension. In this application add the height of the ornamental capital + 1/4" for overall column height.

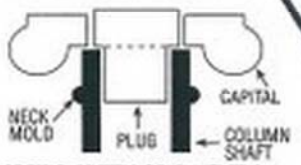

SECTION WITH ORNAMENTAL CAP AND PLACEMENT

APPLYING AN ORNAMENTAL CAPITAL RESTING ON THE NECK RING

Subtract the "T" dimension (from dimension chart in this brochure) and add the height of the ornamental capital + 1/4" for overall column height.

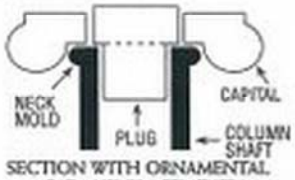

SECTION WITH ORNAMENTAL CAP AND PLACEMENT

Capital Dimensions for Round and Square Columns (In Inches)

Size of Columns (Diameter at Bottom of shaft)		6"*		8"		10"		12"		14"	16"	18"	20"*	22"	24"	26"*	28"*
		ROUND	SQUARE	ROUND	SQUARE*	ROUND	SQUARE*	ROUND	SQUARE*	ROUND	ROUND	ROUND	ROUND	ROUND	ROUND	ROUND	ROUND
Roman Ionic	O/S Dia	5¼	5¼	7¼	6¾	9	8¼	11⅝	10⅛	13	16⅛	18⅛	18⅝	20¼	22⅛	25	25
	Height	2¼	2¼	3	3¼	3¼	3¼	4⅛	4⅛	5⅛	[illegible]	9⅛	8⅝	9	9⅞	12⅛	12⅛
	Abacus	6⅛	6¼	8	10⅛	10⅝	10⅛	12⅝	12⅛	17⅛	20	25¼	25	25	26⅝	32	32
	Projection	N/A	N/A	3¼	N/A	4⅛	N/A	5⅛	N/A	7⅛	8	[illegible]	N/A	10⅛	10⅛	N/A	N/A
	O/S to O/S	N/A	N/A	10⅛	N/A	13⅝	N/A	16⅛	N/A	22⅝	24⅝	[illegible]	N/A	33⅛	34	N/A	N/A
Greek Ionic	O/S Dia	5	5	6⅝	6⅛	8⅝	8⅝	11	10	13⅝	16⅝	16⅝	18	22⅛	22⅛	25	25
	Height	3¼	3¼	3⅝	3⅝	5¼	5	6⅛	6¼	6⅝	9⅛	10	11	13¼	13¼	15	15
	Abacus	6⅝	6⅝	7⅝	7⅝	10⅝	10⅛	14⅝	14	14⅝	22⅛	22	26	29	29	31	31
	Projection	N/A	N/A	4	N/A	5⅝	N/A	8	N/A	6⅝	9⅛	9⅝	N/A	15⅛	14⅝	N/A	N/A
	O/S to O/S	N/A	N/A	11⅝	N/A	14⅛	N/A	21	N/A	20⅝	29⅛	29	N/A	[illegible]	43⅛	N/A	N/A
Temple of the Winds	O/S Dia	5¼	5¼	7⅛	7¼	8⅝	8¼	11	10⅛	12⅝	16⅝	17⅝	17⅛	22	23⅛	24	26
	Height	7	7	8	8	10¼	10	14	13⅛	14¼	18¼	21⅝	21⅛	23⅝	27¼	28	30
	Abacus	8	8	11¼	11⅝	13⅝	13⅝	16⅝	17	21¼	26¼	28⅝	28	35	[illegible]	37	39
	Projection	N/A	N/A	5⅝	N/A	6⅝	N/A	7⅝	N/A	9¼	11	10	N/A	14	16	N/A	N/A
	O/S to O/S	N/A	N/A	11⅝	N/A	13⅝	N/A	16⅝	N/A	21¼	26¼	28⅝	N/A	35	37⅝	N/A	N/A
Roman Corinthian	O/S Dia	5	5	6⅝	6¼	8⅝	9	11⅝	11	13⅝	17⅛	18⅝	18	21⅝	24¼	[illegible]	26
	Height	7	7	8⅛	8⅝	10⅛	11⅝	14⅝	15¼	17⅝	23⅛	26⅝	25¼	31¼	34¼	34	37⅛
	Abacus	9⅛	9⅛	11⅝	11⅝	15	15	18⅝	18⅛	23	32⅛	37⅝	39	40¼	45¼	46	46⅛
	Projection	N/A	N/A	4⅛	N/A	6	N/A	8¼	N/A	9⅛	14¼	14	N/A	16	17⅛	N/A	N/A
	O/S to O/S	N/A	N/A	11⅝	N/A	15	N/A	18⅝	N/A	23	32	37⅝	N/A	40¼	45¼	N/A	N/A
Scamozzi	O/S Dia	5¼	5¼	7	6⅛	9⅛	9	11	10	13	16⅝	18⅛	18	22	22⅛	25	25
	Height	2⅝	2⅝	3	3	3¼	3⅝	4¼	4⅝	5⅛	7¼	8⅝	8⅛	10¼	10⅝	12⅝	12⅝
	Abacus	7¼	7¼	10	9⅝	14⅝	14¼	16⅝	16⅛	18⅝	23⅝	28⅛	28⅛	32	45⅝	39	39
	Projection	N/A	N/A	3¼	N/A	5¼	N/A	6¼	N/A	6⅝	8¼	18⅝	N/A	10⅛	13⅝	N/A	N/A
	O/S to O/S	N/A	N/A	10	N/A	14⅛	N/A	16⅛	N/A	18⅝	23⅝	28⅛	N/A	32	45⅝	N/A	N/A

*Ornamental caps are composition caps FOB Cleveland

Roman Ionic

Greek Ionic

Temple of the Winds

Roman Corinthian

Scamozzi

SIDE

COLUMNS 10 INCH

8 FT. HIGH

13 INCH BASE
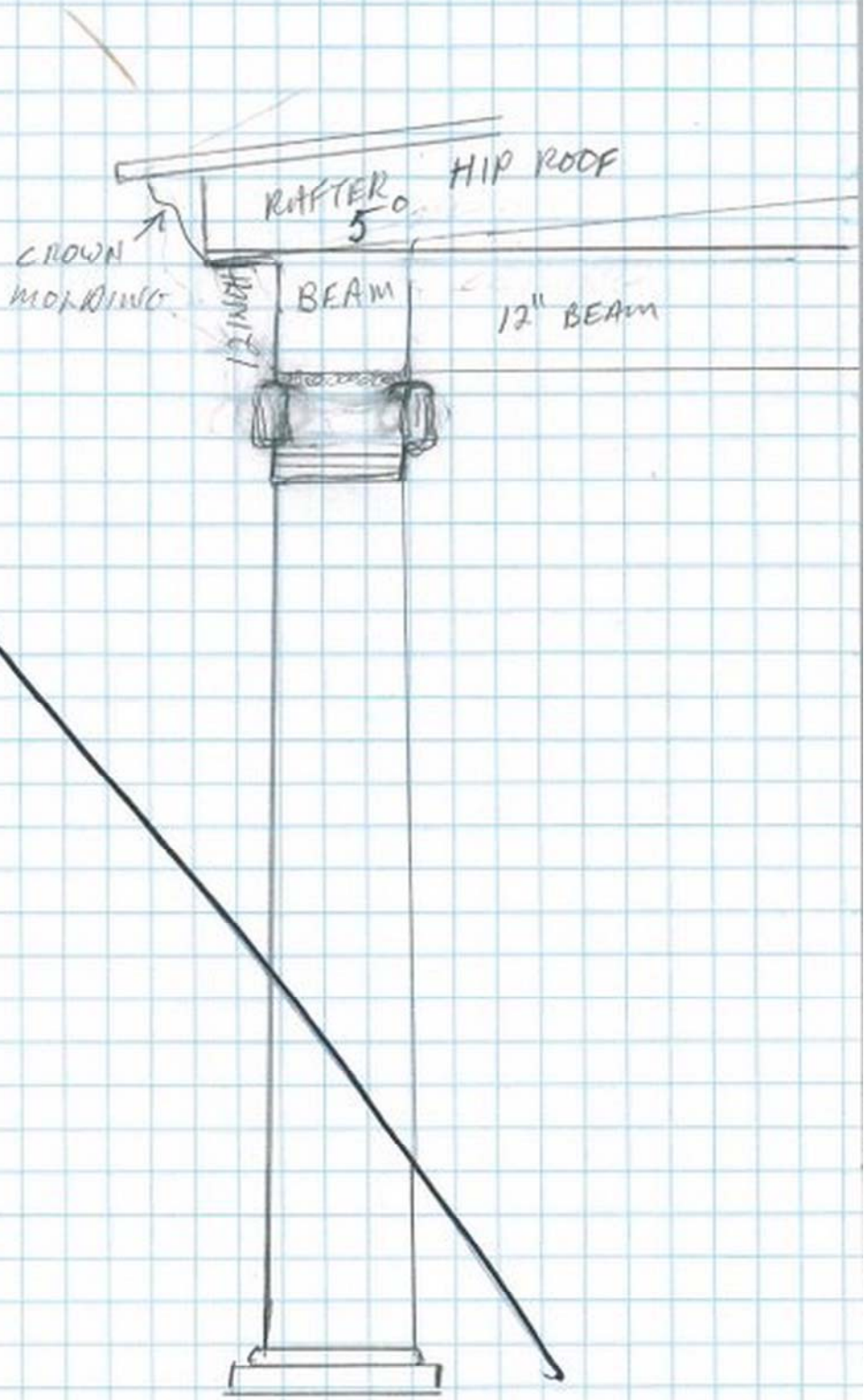
COLUMNS TO BE EVERY 8'4" O.C.